Universities of Rome "La Sapienza" and "Tor Vergata" in collaboration with INAF

PhD course in Astronomy, Astrophysics and Space Sciences

XXXVIII cycle

The Sardinia Radio Telescope and its use in the search for pulsars and technosignatures

Report submitted by:

F. Biagiotti

September 5, 2023

1 Introduction

Thanks to the theoretical work by James Clarke Maxwell and the experimental one by Guglielmo Marconi, humanity mastered the use of radio waves for telecommunications since the beginning of the twentieth century. With the term radio waves, we refer to electromagnetic radiation with a frequency of 300 GHz and below. The United States mastered the art of radio communications and in the 1930s the Bell Telephone Laboratories in Holmdel (New Jersey) hired a young physicist named Karl Guthe Jansky with the job of investigating the sources of static that might interfere with radio voice transmissions at "short wavelengths" ($\simeq$ 10-20 m). After recording signals from all directions for several months, Jansky identified various sources that can be identified with nearby storms, and also a faint steady hiss of unknown origin. This signal was periodic with a period of 23 hours and 56 minutes and was strongest in the direction of the center of our Milky Way galaxy, in the constellation of Sagittarius (Jansky 1933). Jansky's work conventionally signs the start of radio astronomy. More than a half of a century later, thanks to the radio interferometry technique the center of our galaxy was observed again, showing the presence of a SMBH at its center (Event Horizon Telescope Collaboration et al. 2022). Radio astronomy is a very powerful tool that brought many important results, and in this report, I will review the Sardinia radio Telescope the biggest radio facility ever built in Italy, and ready to make new important discoveries.

2 Radio Astronomy Techniques in a nutshell

Radio astronomy is the oldest of the so-called "new" astronomies (x and gamma rays observations, NIR science, neutrinos, gravitational waves, etc), and as of today, it has well-established instruments and techniques. This success was greatly favored by the Earth's atmospheric transmission which is completely transparent to radio waves. With respect to optical astronomy radio astronomy has various advantages:

- Radio waves are way less affected by clouds (adaptive optics is not needed)
- Radio telescopes can be used in the daytime as well as at night and their mirrors can be built with cheaper elements 8at least in principle)
- Atomic neutral hydrogen (HI), the primeval element of the Universe, is only detectable through its radio line at 1420 MHz, and its distribution and motion can only be studied by measuring the intensity and Doppler shifts of this radiation

- a very high angular resolution can be achieved thanks to the interferometry technique

However, there are also disadvantages as radio signals are weak and are immersed in background noise and usually detectors must be cooled. In any case, the big difference with respect to optical astronomy is in the detector nature. In fact, optical CCDs are quantum detectors, while radio antennas are coherent detectors. In the first case, quantum detectors can measure the number of incident photons thanks to the use of semiconductors. In the second case, the amplitude and phase of the incident radiation are measured by processing the electric signal produced within the detector. The basic design of a radio coherent receiver is the heterodyne receiver (Kitchin 1984).
This kind of receiver is usually placed at the focus of a parabolic primary mirror. There a waveguide and a horn focus the radiation toward an instrument which converts it to an electric signal. This can be easily described as a half-wave dipole, even if nowadays detectors mostly use SIS devices, where SIS stands for superconductor-insulator-superconductor. At this point, the electric signal must be processed and so it passes through many stages and operations as can be observed from Fig. 1.

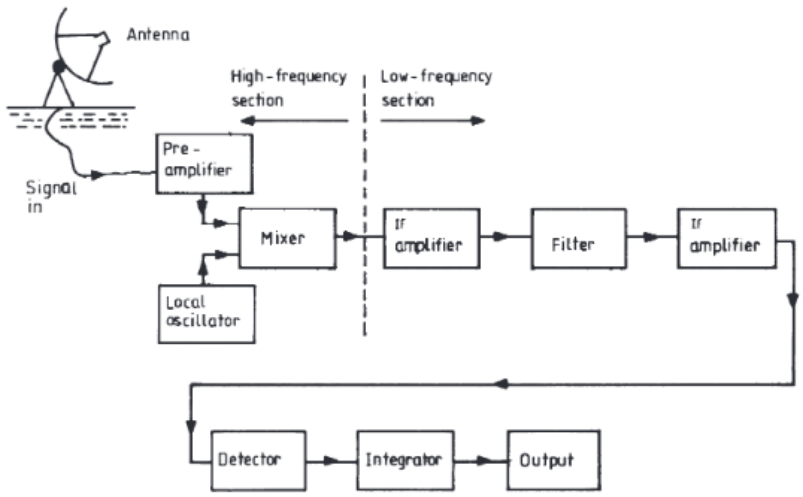

Figure 1: Block diagram of a heterodyne receiver from Kitchin 1984.

First, the signal is amplified and then passed through a mixer. This is a square-law device, i.e. the output voltage from the detector is proportional to the square of the input voltage. At this point the sky signal $\nu_{\rm sky}$ is mixed with the artificial local one produced by a local oscillator $\nu_{\rm LO}$. This step is called *down conversion*. Due to the quadratic response of the instrument the signal processed by the mixer, S is:

$$S = g\left[A_{\rm sky}\sin\left(2\pi\nu_{\rm sky}t\right) + \delta_{\rm sky} + A_{\rm LO}\sin\left(2\pi\nu_{\rm LO}t\right) + \delta_{\rm LO}\right]^2 \tag{1}$$

where g is the gain. Using a low pass filter is very simple at this point to isolate the $gA_{\rm sky}A_{\rm LO}\cos\left[2\pi\left(\nu_{\rm sky}-\nu_{\rm LO}\right)t + \delta_{\rm sky} - \delta_{\rm LO}\right]$ term. The quantity $|\nu_{\rm sky}-\nu_{\rm LO}|$ is called the *intermediate frequency* IF, which is the quantity that is amplified and filtered to obtain the final desired output passing through an integrator and usually an analog-to-digital converter. This is a very simple description of a heterodyne receiver and modern days devices can be way more complicated and articulated. Moreover, every receiver is characterized by an operational bandwidth and is affected by noise.

Usually various receivers can be installed at a radio telescope and these form the so-called *front end*. A series of secondary instruments that analyze and process the output signal takes the name of *back end*. The back ends can perform polarization and spectroscopy measures. As before, the measures are different from the optical case where, if we consider spectroscopy, dispersive elements can be used. For example, to measure orthogonal linear modes of a partially polarized radio signal, a circular horn equipped with orthogonal probes is needed. At this point a cross-correlation device then processes four output signals from the two measured IF signals (Wilson et al. 2009). These are: (i) IF1 detected by the first square-law detector, z_1, (ii) IF2 detected by the second detector, z_2, (iii) the correlation of IF1 and IF2, z_3, and lastly (iv) the correlation of IF1 and IF2 with a phase delay of $\pi/2$. These outputs can be connected to the Stokes parameters in the following way (Wilson et al. 2009):

$$\begin{cases} I = \mathrm{const}(z_1 + z_2) \\ Q = \mathrm{const}(z_1 - z_2) \\ U = 2\,\mathrm{const}(z_3) \\ V = \mathrm{const}(z_4) \end{cases} \tag{2}$$

Regarding spectroscopy, this can be achieved in different ways. One of the most used techniques is autocorrelation spectroscopy where the electric signal varying in time $V(t)$ is first correlated, and then this result is Fourier Transformed to obtain the power spectrum density. Usually, the autocorrelation function is evaluated in hardware, then the Fourier Transform is performed in a general-purpose digital computer. The quality of a spectrometer mainly depends on three characteristics: (i) the number of channels, (ii) the total bandwidth analyzed, and (iii) the resolution. Regarding the last point, a frequency resolution in the kHz range is required if narrow spectral features are to be resolved. Strictly connected to the resolution is the concept of sensitivity which usually is evaluated in terms of a minimum temperature $T_{\rm min}$ that can be detected. This is a function of the bandwidth of the instrument, $\Delta\nu$, and of the exposure time, τ, (Wilson et al. 2009):

$$T_{\min} = \frac{KT_{\text{sys}}}{\sqrt{\Delta\nu \cdot \tau}}, \tag{3}$$

where T_{sys} is the systematic noise and K a constant.

3 Sardinia Radio Telescope

The Sardinia Radio Telescope (SRT) is a fully steerable 64 m diameter parabolic telescope that operates in the frequency range between 0.3 and 116 GHz (Prandoni et al. 2017). It is based in the plain of Pranu Sanguni near San Basilio in the province of Cagliari and is the result of scientific and technical collaboration among three research units of the Italian National Institute for Astrophysics (INAF): the Institute of Radio Astronomy (IRA), the Cagliari Astronomical Observatory (OAC), and the Arcetri Astrophysical Observatory (OAA). The SRT has a shaped Gregorian optical configuration with a 7.9 m diameter secondary mirror and a unique active primary mirror, in total composed of 1008 electromechanical actuators, able to correct the deformations induced by gravity on the primary surface (Bolli et al. 2015). Each panel has an area ranging from 2.4 to 5.3 m^2 and it is built using aluminum sheets glued, by means of a layer of epoxy resin. A sketch of the design of SRT is given in Fig. 2. Further mirrors are placed beneath the Gregorian focus, see Fig. 2, and are arranged in a Beam WaveGuide configuration. These mirrors together with a rotating turret allow the addition of four more focal points. This allows the SRT scientific team to allocate up to 20 receivers.

Moreover, a Water Vapor Radiometer (WVR) and a Weather Station together with a complex helium plant consisting of seven pairs of supply-and-return lines assuring detectors can work at cryogenic conditions, and ensure high efficiency at all operating frequencies. Thanks to the mechanical design a high efficiency is ensured also for the whole elevation range (5°-90°). At the beginning of 2019 SRT was equipped with different detectors that cover the whole radio spectrum, see Fig. 3. In particular, these are: a 7-beam K-band (18–26 GHz) receiver; a mono-feed C-band receiver, centered at the 6.7 GHz methanol line; and a coaxial dual-feed L/P band receiver, with central frequencies of 350 MHz and 1.55 GHz, respectively.

On the 25th of June 2019, an upgrade plan for the receivers was funded by the Italian Ministry for Education (MIUR). A series of new receivers have been built and are being installed. These are a mono-feed covering the lower frequency part of the C band (5 GHz); two multi-feed receivers of 7 and 19 beams operating at S and Q bands (i.e., at 3 and 43 GHz) respectively; a W band (75-116 GHz) heterodyne 16 beams receiver; a 3mm band KID detector called MISTRAL (KID stands for Kinetic Inductance Detector, see for example Day et al. 2003 and Monfardini

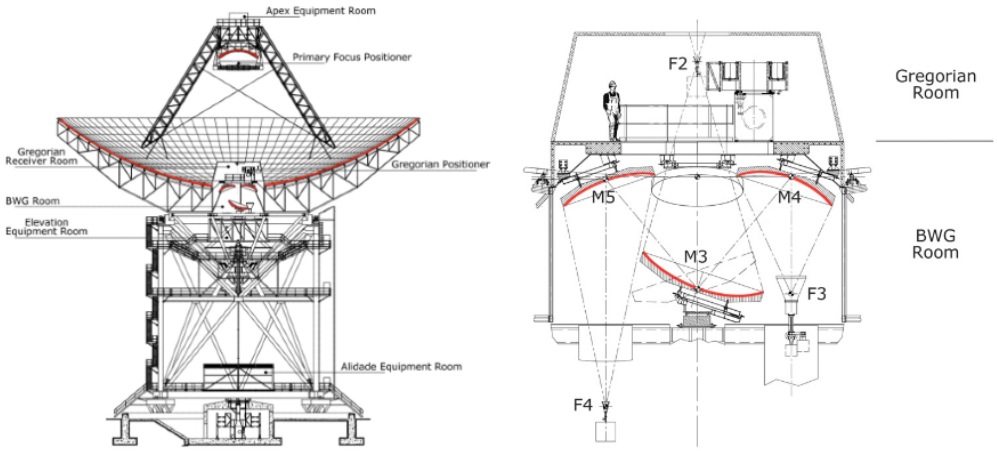

Figure 2: *Left*: mechanical structure of the SRT. *Right*: Focus on the so-called Gregorian and BWG rooms where a system of mirrors and a rotating turret allow the creation of four focal points. The images are taken from Bolli et al. 2015 and the radio-frequency reflecting surfaces are highlighted in red.

et al. 2011).

SRT is equipped with a variety of digital back ends (Andrea Melis et al. 2014), and some of them are listed below (Prandoni et al. 2017):

- *XARCOS*: a narrowband spectropolarimeter with 16 input channels, with a working band of 125-250 Mhz. The instantaneous bandwidth ranges between 0.488 and 62.5 MHz, which in turn implies an achievable maximum spectral resolution of $\simeq$ 238 Hz.
- *Digital Base Band Converter*: digital platform composed of four analog-to-digital converter (ADC) boards that are 1 GHz bandwidth each, used mainly to perform interferometry experiments in collaboration with other radio facilities.
- *Digital Filter Bank Mark 3 (DFB3)*: a spectrometer which performs mainly considering the Fast Fourier Transform, called also FX correlator. It allows up to 8192 spectral channels and four inputs with a 1024 MHz maximum bandwidth each and 8-bit sampling for a high dynamic range. It is mainly used for pular timing and searching.
- *ROACH*: a spectrometer that provides 32 complex channels of 16 MHz each, for a total bandwidth of 512 MHz.

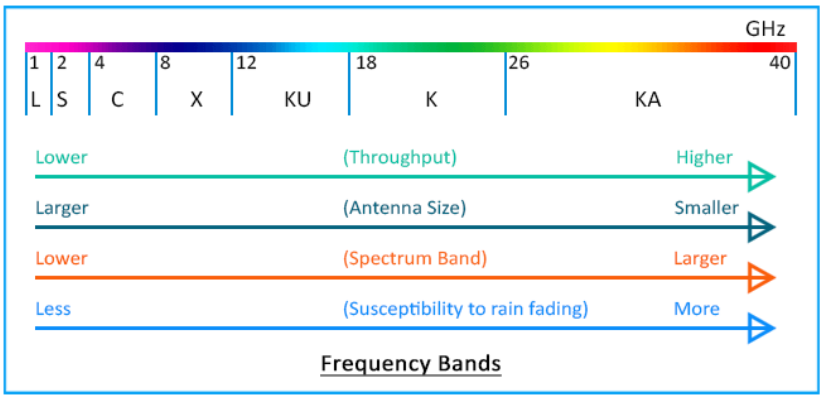

Figure 3: A portion of the radio spectrum.

- *SARDARA*: a wide-band, multi-feed, general-purpose, and re-configurable digital platform, designed to overcome the weakness of both XARCOS and DFB3 (the small bandwidth for the first and the 4 ADCs for the second, see A. Melis et al. 2017 and A. Melis et al. 2018).

4 Science with the SRT

SRT is the fourth most large steerable radio telescope in the world, after the Green Bank RT (USA), the Effelsberg RT (Germany), and the Jodrell Bank RT (UK). However, thanks to its active surface can constitute a sensitive element of the mm-VLBI (Very-long-baseline interferometry) network operating in the 7- and 3-mm bands. Also, its position is very strategic for interferometry studies. In fact, in view of the African VLBI Network (currently under development), SRT is fundamental to obtaining high-resolution observations of sources at intermediate declinations.

The active surface together with the availability of multi-feed receivers makes the SRT a fast mapping machine, as 10×larger mapping speeds than its main competitors (the Effelsberg and Green Bank telescopes) can be reached. Therefore SRT can play a major role in conducting wide-area surveys of the sky in a frequency range (20–90 GHz) (Prandoni et al. 2017). The identification of the radio sources populating the northern hemisphere at these frequencies is very important as, for example, they can be a source of systematics in the context of CMB science.

SRT can be used to study various astronomical objects and also in the context of satellite communication. In particular, its wide-band mapping possibilities are crucial in the context of the characterization of Galactic and extra-galactic sources. An example is the observations of M31 (Battistelli et al. 2019), which combined

with previous data showed that our neighbor galaxy is dominated at frequencies below 10 GHz by synchrotron emission.
In addition, the frequency agility implemented at the SRT allows fast switching from one observing frequency to another, and that can be very important in the context of characterizing the variability of radio jets generated for example by X-ray binaries.
In the following sections I will focus on the performance of the SRT in the context of pulsar and technosignatures searches.

4.1 Pulsar Science @ SRT

Pulsars are rotating and highly magnetized ($B \simeq 10^{12}\,G$) neutron stars that emit in the radio due to the charge flow along open magnetic field lines (Pacini 1968). Due to their rotation and theri compact nature, pulsar emission is characterized by very regular periodic pulses. The period can range from a few milliseconds to tens of seconds. They were discovered in 1967 by Jocelyn Bell, even if a large fraction of the credit was given only to its supervisor Anthony Hewitt. They are unique astronomical objects and an important proxy in the context of the study of compact objects. Moreover, thanks to their extremely regular period, measuring the difference in arrival times of the pulses is possible to detect the presence of planetary-mass companions (Wolszczan et al. 1992) and even the angular momentum loss due to gravitational waves (Taylor et al. 1989 ; Burgay et al. 2003).
The SRT is one of the five telescopes of the European Pulsar Timing Array (EPTA, Kramer et al. 2013), which also includes Effelsberg, Jodrell Bank, Nancay, and the Westerbork Radio Telescope (WSRT).
One of the main goals of EPTA is to collaborate with the North American Nanohertz Observatory for Gravitational Waves (NANOGrav) and the Australian Parkes Pulsar Timing Array with the aim of detecting gravitational waves (GW) at nanohertz frequencies using the high precision timing of millisecond pulsars. Thanks to its dual-band L/P receiver, the SRT will be of great importance in measuring accurate dispersion measure variations, which in turn are crucial to obtaining the high precision above cited. Moreover, SRT thanks to its location will make possible the observations of pulsars with declinations below 20 deg. As for today, SRT was mostly active in the LEAP experiment (Bassa et al. 2016).

LEAP stands for Large European Array for Pulsars, and its goal is recording the dual polarization, Nyquist-sampled time series of the EPTA telescopes incoming radio waves, with the aim of processing them offline to form the coherent sum. The resulting signal can be considered in terms of precision and quality as a signal collected with a telescope with an effective aperture equivalent to a 195-m diameter circular dish. All observations are performed using a bandwidth of 128 MHz centered at a frequency of 1396 MHz. To add coherently the data first a correla-

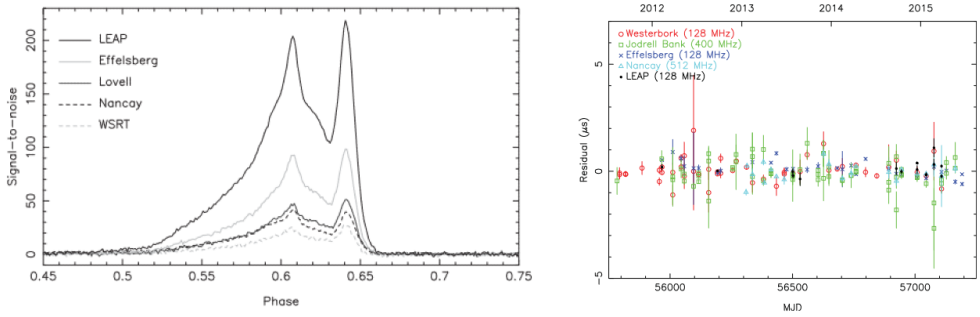

Figure 4: LEAP observations of PSR J1022+1001. *Left*: individual and coherently summed S/N ratios. *Right*: individual and coherently summed pulsar timing residuals.

tion analysis is needed in order to find the phase offsets between the telescopes. Then, the sum corrected for the offsets, should produce a higher signal-to-noise ratio S/N and a higher timing precision with respect to the single measurements coming from each telescope, see Fig. 4. SRT started observing LEAP millisecond pulsars targets in May 2014 thanks to the ROACH (and SARDARA) back ends (Perrodin et al. 2016. In fact, to find the periodic radio beam of a pulsar a common approach is to perform Fourier Trasforms of signals at different frequencies, so a radio spectrometer is needed. SRT timing precision is comparable to the one of the other EPTA telescopes, as it is possible to observe from the left panel in Fig. 5, where observations of PSR J1022+1001 are shown. However, the active presence of SRT improves a lot the S/N in the context of the LEAP experiment. In fact, if we look at the right panel of Fig. 5, we can observe that the maximum value of S/N observing PSR J1022+1001 is reached only when the SRT is included.

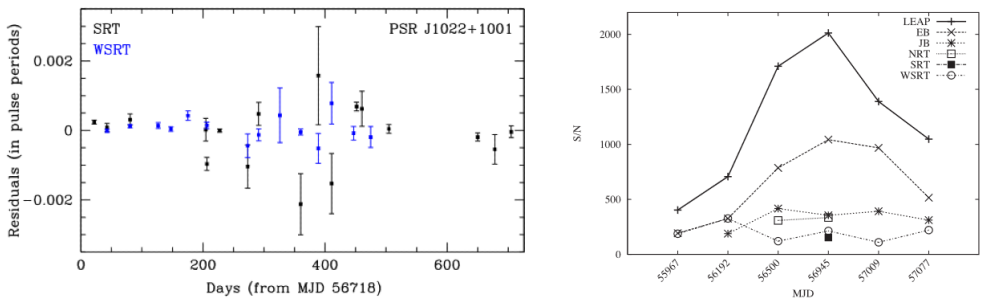

Figure 5: SRT observations of PSR J1022+1001 in the context of the LEAP experient. *Left*: arrival times residuals measured by SRT compared with the ones measured by WSRT. *Right*: The total S/N reached when the individual signals detected by the LEAP telescopes are coherently summed.

4.2 SETI @ SRT

SETI stands for Search for Extraterrestrial Technological Intelligent life. Usually, SETI is also used to indicate a search for the so-called technosignatures (in association with the more famous biosignatures). In the context of radio astronomy, the identification of narrow-band signals in the 1.1-1.9 GHz range has been proposed as a possible technosignature (Cocconi et al. 1959; Tarter et al. 1980). The situation is represented in Fig. 6, where a so-called *waterfall* diagram is shown.

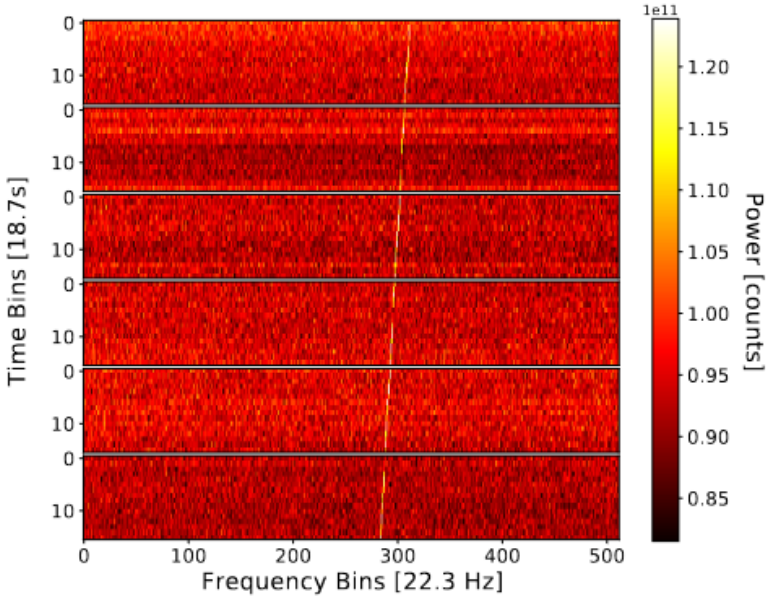

Figure 6: Simulated narrowband signals that can be identified as a positive technosignature. This signal is part of a training set developed in order to try to analyze with deep learning future BL data (Ma et al. 2023).

This is intriguing as this kind of SETI can use all the progress made in the pulsar science field as a starting point. Also historically there is a link between pulsar science and SETI, as the signal detected by Bell in 1967 was named Little Green Man in the observational logbook, due to its very precise pulsation period. The great difference between artificial and astrophysical radio signals is the difference between their bandwidths. For example, human technology is easily capable of achieving $\Delta\nu/\nu \simeq 10^{-12}$, while astrophysical masers have a bandwidth of $\Delta\nu \simeq 500Hz$. The 1.1-1.9 GHz interval is used because is less affected by Earth's atmosphere and by the background noise that can be represented by synchrotron radiation. Moreover, in this frequency range lie both the hydrogen 21 cm line and the hydroxyl hyperfine transition. These two species are produced by the dissociation of water, the essential molecule for life as we know it. However, finding

narrowband signals in the sea represented by the radio background that we can observe with a telescope like the SRT is very very difficult due to various factors. For example in the previous discourse, we assume that ETIs wanted to communicate with us with antennas as big as our modern ones, we did not consider the orientation of the hypothetical signal or the existence of mimic astrophysical signals, and we avoided talking about the myriads of satellites orbiting the Earth that can act as artificial false positives. We also omit the role of causality. If we look at our millennial history as mankind, we can be classified as an efficiently communicating ET only if we look at the last centuries of our existence on Earth (see Introduction). However, citing Giuseppe Cocconi "[t]he probability of success is difficult to estimate; but if we never search, the chance of success is zero."
Usually radio SETI science has been performed in the so-called *piggyback* mode. This means that a copy of the signal being acquired by the main instrument attached to the radio telescope is reprocessed by applying ad-hoc algorithms. Berkeley University pioneered this field thanks to the SERENDIP series (Search for Extraterrestrial Radio Emissions from Nearby Developed Intelligent Populations) instruments, that have been installed for example at the Arecibo Observatory and Green Bank Observatory (Werthimer et al. 2001). These are basically wide-band spectrometers with a large number of spectral channels, built in such a way as to obtain an extremely narrow-band resolution, of the order of less than a Hz. In Italy, a SERENDIP IV was installed in 1998 at the Medicina Radio Telescope [1].
Even if SETI can be seen as merely as a sci-fi hypothesis, the discovery of Earth-size exoplanets (see for example Gillon et al. 2017) had a huge impact in moving both a part of the astrophysical community and the "public". That is why, in the last years of the last decade, a private organization funded a new radio SETI observational survey, the Breakthrough Listen Project (Price et al. 2020). The project mainly uses observational time from the Green Bank Telescope and the Parkes Observatory (Australia). The strategy is different with respect to older Berkeley surveys, as it considers the nearby stellar and exoplanetary catalogs as a starting point. No more piggyback mode but direct observations. Early results found no evidence for 100 %-duty cycle transmitters (e.g., a radio beacon), either (i) directed at Earth with a power output equal to or greater than the brightest human-made transmitters, or (ii) isotropic with a power output equal to the level of the current total human power usage on Earth, in any of the star systems observed (Enriquez et al. 2017).

SRT could play an important role in the search for technosignatures. In the work by A. Melis et al. 2018, two major roads that SRT SETI investigations can walk, were described. The first regards the installation of a SERENDIP VI set up for

[1] https://link.springer.com/book/10.1007/978-3-030-63806-1

piggyback observations, while the second is the development of new modern algorithms for the analysis (made available to the scientific community) of the BL project. The scientific team at SRT is planning to add a SERENDIP VI to the SARDARA back-end. SERENDIP VI can digitize the incoming signals with a bandwidth of up to 2.4 GHz, and split them up into 4096 channels; it can further split each of these 4096 channels into fine channels on GPUs which can process a 300-MHz bandwidth (A. Melis et al. 2018). In the end, a search for signals above a particular threshold is performed.
Regarding the second aspect, the SRT team is working on two different analysis techniques that need the usage of alternatives to the Fourier Transform. These are the Kahrunen-Loeve Transform (KLT) and the Wavelets. Both of these methods can be very useful in the context of searching for signals that are neither monochromatic nor narrowband. In particular, Wavelets can play an important role in revealing non-stationary signals as signals that show time variation in frequency and amplitude or sharp transients and frequency changes.
In any case, a rule of thumb of a good SETI survey is that this should be planned to give interesting results even when no aliens are discovered (this is also called Dyson's First Law). Regarding the SRT, the observational and data analysis techniques developed in the context of the search for radio technosignatures can be sure of help in the context of the search and characterization of the so-called Fast Radio Bursts (Lorimer et al. 2007), i.e. transient radio pulses of length ranging from a fraction of a millisecond to 3 seconds, maybe caused by some high-energy astrophysical process not yet understood. The FRB science is rapidly evolving and also in this field SRT can play a major role (see for example Pilia et al. 2020).

5 Summary and Conclusions

I briefly described the working principles of some basic techniques used in the context of radio astronomy observations. Then I focused on the largest radio facility built in Italy, the Sardinia Radio Telescope (SRT), and briefly described its design and its instrumentation fleet. Then I focused on the scientific themes and results that can be achieved with the SRT. In particular, a larger space was given to the pulsars science collaboration where the SRT most actively participates, the LEAP experiment. Lastly, I briefly introduced the wide field of the Search for Extraterrestrial technological Intelligent Life and briefly described how the SRT can be involved in the future. In the next years, the PON instrumentation upgrade will be completed and SRT can begin to observe full-time the night sky. Maybe, in the next proposals that will be submitted some of them will concern the themes of pulsar timing or exoplanets-focused SETI, and with this work, I tried to explain why it would be important and interesting.

References

Bassa, C. G. et al. (Feb. 2016). "LEAP: the Large European Array for Pulsars". In: 456.2, pp. 2196–2209. DOI: 10.1093/mnras/stv2755. arXiv: 1511.06597 [astro-ph.IM].

Battistelli, E. S. et al. (June 2019). "Strong Evidence of Anomalous Microwave Emission from the Flux Density Spectrum of M31". In: 877.2, L31, p. L31. DOI: 10.3847/2041-8213/ab21de. arXiv: 1905.12276 [astro-ph.GA].

Bolli, P. et al. (Dec. 2015). "Sardinia Radio Telescope". In: *Journal of Astronomical Instrumentation* 4, 1550008-880, pp. 1550008–880. DOI: 10.1142/S2251171715500087. arXiv: 1603.06134 [astro-ph.IM].

Burgay, M. et al. (Dec. 2003). "An increased estimate of the merger rate of double neutron stars from observations of a highly relativistic system". In: 426.6966, pp. 531–533. DOI: 10.1038/nature02124. arXiv: astro-ph/0312071 [astro-ph].

Cocconi, Giuseppe et al. (Sept. 1959). "Searching for Interstellar Communications". In: 184.4690, pp. 844–846. DOI: 10.1038/184844a0.

Day, Peter K. et al. (Oct. 2003). "A broadband superconducting detector suitable for use in large arrays". In: 425.6960, pp. 817–821. DOI: 10.1038/nature02037.

Enriquez, J. Emilio et al. (Nov. 2017). "The Breakthrough Listen Search for Intelligent Life: 1.1-1.9 GHz Observations of 692 Nearby Stars". In: 849.2, 104, p. 104. DOI: 10.3847/1538-4357/aa8d1b. arXiv: 1709.03491 [astro-ph.EP].

Event Horizon Telescope Collaboration et al. (May 2022). "First Sagittarius A* Event Horizon Telescope Results. I. The Shadow of the Supermassive Black Hole in the Center of the Milky Way". In: 930.2, L12, p. L12. DOI: 10.3847/2041-8213/ac6674.

Gillon, Michaël et al. (Feb. 2017). "Seven temperate terrestrial planets around the nearby ultracool dwarf star TRAPPIST-1". In: 542.7642, pp. 456–460. DOI: 10.1038/nature21360. arXiv: 1703.01424 [astro-ph.EP].

Jansky, Karl G. (July 1933). "Radio Waves from Outside the Solar System". In: 132.3323, p. 66. DOI: 10.1038/132066a0.

Kitchin, C. R. (1984). *Astrophysical techniques*.

Kramer, Michael et al. (Nov. 2013). "The European Pulsar Timing Array and the Large European Array for Pulsars". In: *Classical and Quantum Gravity* 30.22, 224009, p. 224009. DOI: 10.1088/0264-9381/30/22/224009.

Lorimer, D. R. et al. (Nov. 2007). "A Bright Millisecond Radio Burst of Extragalactic Origin". In: *Science* 318.5851, p. 777. DOI: 10.1126/science.1147532. arXiv: 0709.4301 [astro-ph].

Ma, Peter Xiangyuan et al. (Jan. 2023). "A deep-learning search for technosignatures from 820 nearby stars". In: *Nature Astronomy*. DOI: 10.1038/s41550-022-01872-z.

Melis, A. et al. (Jan. 2017). "FPGA-based digital back-ends for the Sardinia Radio Telescope". In: 88, p. 195.

Melis, A. et al. (Mar. 2018). "SArdinia Roach2-based Digital Architecture for Radio Astronomy (SARDARA)". In: *Journal of Astronomical Instrumentation* 7.1, 1850004, p. 1850004. DOI: 10.1142/S2251171718500046.

Melis, Andrea et al. (July 2014). "An infrastructure for multi back-end observations with the Sardinia Radio Telescope". In: *Millimeter, Submillimeter, and Far-Infrared Detectors and Instrumentation for Astronomy VII*. Ed. by Wayne S. Holland et al. Vol. 9153. Society of Photo-Optical Instrumentation Engineers (SPIE) Conference Series, 91532M, p. 91532M. DOI: 10.1117/12.2056576.

Monfardini, A. et al. (June 2011). "A Dual-band Millimeter-wave Kinetic Inductance Camera for the IRAM 30 m Telescope". In: 194.2, 24, p. 24. DOI: 10.1088/0067-0049/194/2/24. arXiv: 1102.0870 [astro-ph.IM].

Pacini, F. (July 1968). "Rotating Neutron Stars, Pulsars and Supernova Remnants". In: 219.5150, pp. 145–146. DOI: 10.1038/219145a0.

Perrodin, D. et al. (Aug. 2016). "Pulsar observations with European telescopes for testing gravity and detecting gravitational waves". In: *arXiv e-prints*, arXiv:1608.01839, arXiv:1608.01839. DOI: 10.48550/arXiv.1608.01839. arXiv: 1608.01839 [astro-ph.IM].

Pilia, M. et al. (June 2020). "The Lowest-frequency Fast Radio Bursts: Sardinia Radio Telescope Detection of the Periodic FRB 180916 at 328 MHz". In: 896.2, L40, p. L40. DOI: 10.3847/2041-8213/ab96c0. arXiv: 2003.12748 [astro-ph.HE].

Prandoni, I. et al. (Dec. 2017). "The Sardinia Radio Telescope . From a technological project to a radio observatory". In: 608, A40, A40. DOI: 10.1051/0004-6361/201630243. arXiv: 1703.09673 [astro-ph.IM].

Price, Danny C. et al. (Mar. 2020). "The Breakthrough Listen Search for Intelligent Life: Observations of 1327 Nearby Stars Over 1.10-3.45 GHz". In: 159.3, 86, p. 86. DOI: 10.3847/1538-3881/ab65f1. arXiv: 1906.07750 [astro-ph.EP].

Tarter, J. et al. (Apr. 1980). "A high-sensitivity search for extraterrestrial intelligence at γ18 cm". In: 42.1, pp. 136–144. DOI: 10.1016/0019-1035(80)90251-1.

Taylor, J. H. et al. (Oct. 1989). "Further Experimental Tests of Relativistic Gravity Using the Binary Pulsar PSR 1913+16". In: 345, p. 434. DOI: 10.1086/167917.

Werthimer, Dan et al. (Aug. 2001). "Berkeley radio and optical SETI programs: SETI@home, SERENDIP, and SEVENDIP". In: *The Search for Extraterrestrial Intelligence (SETI) in the Optical Spectrum III*. Ed. by Stuart A. Kingsley et al. Vol. 4273. Society of Photo-Optical Instrumentation Engineers (SPIE) Conference Series, pp. 104–109. DOI: 10.1117/12.435384.

Wilson, Thomas L. et al. (2009). *Tools of Radio Astronomy*. DOI: 10.1007/978-3-540-85122-6.

Wolszczan, A. et al. (Jan. 1992). "A planetary system around the millisecond pulsar PSR1257 + 12". In: 355.6356, pp. 145–147. DOI: 10.1038/355145a0.